Flow Sensor

EWN-Y Series
+ EFS Flow Sensor

Provides precise flow monitoring, feedback, accurate real-time control and display of dosing rate

Set point control allows the desired flow rate to be simply programmed into the pump. Through feedback from the EFS sensor, the pump constantly adjusts its speed to maintain the set dosing rate - even under changing temperature, viscosity or suction and discharge pressure conditions.The EFS is mounted directly on the pump for accurate dosing rate measurement - ALL WITHOUT ANY TIME-CONSUMING CALIBRATION

KEY BENEFITS

- High Speed Performance
  E-Class pumps operate at 360 strokes-per-minute, providing high resolution chemical feed. Most competitive products operate at slower speeds, resulting in slug feeding, accelerated diaphragm wear and poor feed control.

- Engineered Longevity
  All E-Class pumps feature dual bearing support. The armature and shaft are supported with a bearing on each end, which ensures proper axial movement, enabling the E-Class to operate at 360 SPM while extending the life of the diaphragm.

- Superior Check Valve Performance
  Dual Check Valve Assemblies in both suction and discharge fittings feature precision ball guides and tapered seats. Precise machining and molding of parts limit valve ball travel, ensuring that balls fully seat and seal with every stroke. This superior check valve design guarantees fast priming and reliable performance.

- High Compression Ratio
  The compression ratio of a metering pump is important because it affects the pump's ability to prime and vent. The compression ratio is raised when you reduce the dead volume of the pump head during operation. All E-Class pumps feature a very high compression ratio that ensures proper feed especially with off-gassing products (i.e. Sodium Hypochlorite).

WALCHEM
IWAKI America Inc.

HOW THE AUTO-DEGASSING SYSTEM WITH EFS OPERATES:

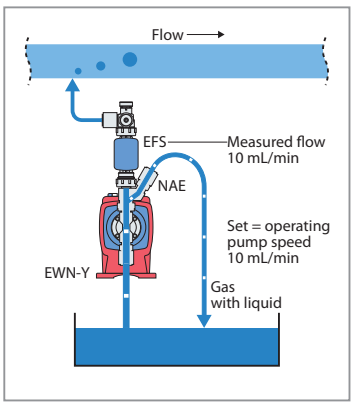

The auto air vent valve bleeds gas and liquid out of the pump chamber. However, pump output is maintained due to the feedback control from the flow sensor.

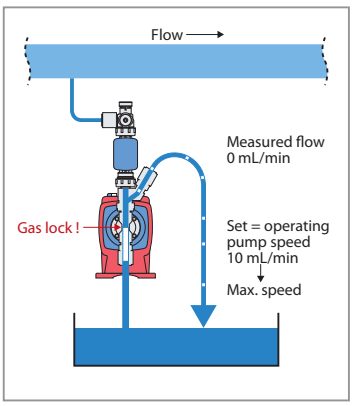

When a large volume of gas enters into the pump chamber, pump output will go to "zero" until the gas bleeds out. The feedback control increases pump speed, reducing the bleed time and quickly re-priming the pump.

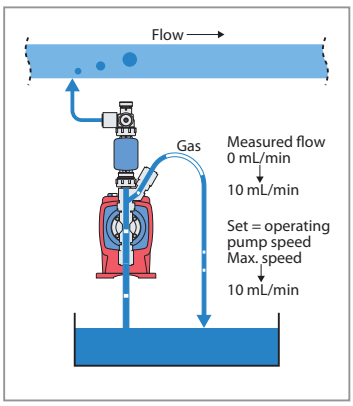

After the gas has been purged, the EFS sensor will begin to measure flow. Feedback from the sensor controls the pump, slowing it back down so the flow rate meets the set value.

- The new EWN-Y electromagnetic pump combined with EFS flow sensor provides accurate real-time control and display of dosing rate. Presence of non-conductive media (i.e. oil) in the flow may generate erroneous readings.
- Set point control allows the desired flow rate to be simply programmed into the pump. Through feedback from the EFS sensor, the pump constantly adjusts its speed to maintain the set dosing rate - even under changing temperature, viscosity or suction and discharge pressure conditions.
- The EWN-Y provides a clear display of actual dosing rate and a 4-20 mA output signal proportional to the flow rate.
- An optional Auto Degassing Valve (ADV) can be mounted in-line with the EFS sensor to eliminate gas-lock conditions quickly with continuous venting.
- The EWN-Y pump automatically recognizes the EFS sensor when connected and powered.
- A standard injection check valve is required when discharge-line length is less than 10 feet. An in-line check valve (purchased separately) is required when discharge-line length is over 10 feet.

WET END MATERIALS

Pump	VC	VE	PC	PE	PA	TC	TA
1 Pump Head	PVC	PVC	GFRPP	GFRPP	GFRPP	PVDF	PVDF
2 Valve Ball	CE						
3 Valve Seat	FKM	EPDM	FKM	EPDM	PCTFE	FKM	PCTFE
4 Diaphragm	PTFE+EPDM						
5 Gasket	PTFE						
9 Separation Pin	Ti	HC276	N/A	N/A	N/A	N/A	N/A

EFS Sensor	FT	FH	FF
6 O-Ring	FKM	EPDM	FKM
7 EFS Body	PVDF	PVDF	PVDF
8 EFS Electrode	Titanium	Hastelloy C22	

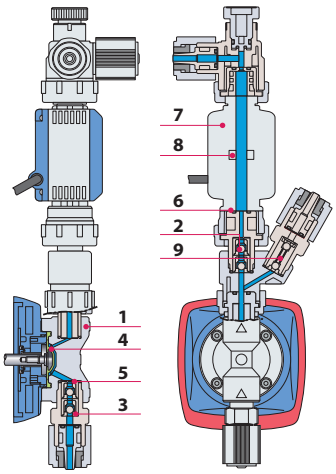

CE	Alumina ceramic	EPDM	Ethylene propylene diene monomer
FKM	Fluoroelastomer	GFRPP	Glass fiber reinforced polypropylene
PTFE	Polytetrafluoroethylene	PVC	Polyvinylchloride (translucent)
PCTFE	Polychlorotrifluoroethylene	HC	Hastelloy C276
PVDF	Polyvinylidenefluoride		

PUMP SPECIFICATIONS

Model	Capacity GPH (mL/min)	Discharge Capacity per Shot mL/Shot	Rated Discharge Pressure PSI (MPa)	Stroke Length Adjustable Range %	Stroke Rate % (SPM)	Standard Connection (OD x ID) Hose dia inches	Current A	Average Power Consumption W	Voltage VAC 50/60Hz	Shipping Weight lbs (kg)
B11	0.6 (38)	0.02-0.11	150 (1.0)	50-100	0.1-100 (1-360)	3/8 x 1/4	0.8	20	100-240	12 (5.5)
B11-A	0.5 (30)	0.02-0.08	150 (1.0)							
B16	1.0 (65)	0.04-0.18	105 (0.7)							
B16-A	0.9 (55)	0.03-0.15	105 (0.7)							
B21	1.6 (100)	0.06-0.28	60 (0.4)							
B21-A	1.4 (86)	0.05-0.24	60 (0.4)							
B31	3.2 (200)	0.11-0.56	30 (0.2)							
C16	1.3 (80)	0.04-0.22	150 (1.0)	40-100			1.2	24		14 (6.4)
C16-A	1.0 (65)	0.04-0.18	150 (1.0)							
C21	2.1 (130)	0.07-0.36	105 (0.7)							
C21-A	1.7 (110)	0.06-0.31	105 (0.7)							
C31	4.3 (270)	0.15-0.75	50 (0.35)							
C36	6.7 (420)	0.23-1.17	30 (0.2)							

Note 1: Each discharge capacity shown above is at the discharge pressure(stroke length 100%,stroke rate100%) and increases as discharge pressure reduces.
Note 2: The performance is based on pumping clean water at ambient temperature at rated voltage.
Note 3: -A versions include the auto degassing valve (ADV).

SENSOR SPECIFICATIONS

Liquid Conditions	Temperature range	32-140°F (0-60°C) non-freezing, no viscosity/characteristic change
	Required conductivity	1000mS/m or more
Accuracy for the EFS-05 with EWN-B11/B16/B21/C16/C21		±5% of reading at or above 40ml/min | ±2ml/min below 40ml/min
Accuracy for the EFS-10 with EWN-B31/C31/C36		±5% of reading at or above 120ml/min | ±6ml/min below 120ml/min

OPERATING CONDITIONS

Ambient Temperature: 32° to 122°F (0 to 50°C) Relative Humidity: to 85% (non-condensing)
Liquid Temperature: PVC liquid ends: 32 to 104°F (0 to 40°C) PP, PVDF liquid ends: 32 to 140°F (0 to 60°C)
Below 32°F (0°C), pump is limited to 70% of maximum pressure. Liquid cannot freeze.
Storage Temperature: 14° to 122°F (-10° to 50°C)

DIMENSIONS

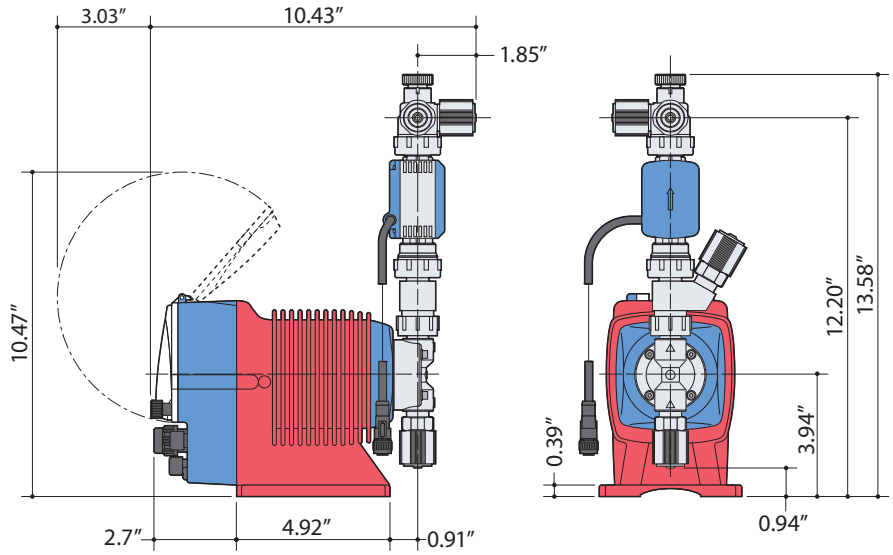

SAFETY CERTIFICATIONS

The EWN series metering pumps* are WQA tested and certified to NSF/ANSI/CAN Standard 61.

*See WWW.WQA.ORG for certified chemicals, parameters and MUL levels. NSF/ANSI/CAN 61 addresses health effects only. It does not address disinfection efficacy of the product.

The EWN series metering pumps are tested by Intertek to UL and CSA standards.

2 YEAR 'Bumper to Bumper' WARRANTY

SPECIFICATIONS

EWN –	B	11	VC	□	U	Y	A	–	
1	2	3	4	5	6	7	8		9

1 Pump Series

2 Drive Unit (See Specifications Table on page 3)
B: 20W
C: 24W

3 Diaphragm Diameter
11: 10mm 16: 15mm 21: 20mm
31: 30mm 36: 35mm

4 Liquid End Material
See Table on page 2

5 Connection (For other options, consult factory)
No Character: 3/8" OD x 1/4" ID (11 - 21sizes)
1/2" OD x 3/8" ID (31 - 36 sizes)

6 Power Code
U: 115 VAC US Cord
2: 230 VAC US Cord

7 Controller Function
Y: Multi-function type

8 Special
H: High pressure version (250 PSI)
(available on B11/C16-PC/PE/PA/SH)
A: Auto Degassing valve included
(available on 11-21-VC/VE)
M: Multifunction valve included (available on all sizes & liquid ends except FC/SH/HV or with other options)

9 EFS Flow Sensor (See Table on Pg. 2 for materials)
Blank: No sensor, pump only (See EWN-Y brochure)
1: EFS-05/10-FT
2: EFS-05/10-FH
3: EFS-05/10-FF
Notes:
Size 05 for 11/16/21 pumps
Size 10 for 31/36 pumps

Input/Output Connectors:
E90495 5-pin connector: Use for Analog, Pulse, Interlock, AUX & Batch S/S inputs & Analog Output. (Supplied with pump)
E90496 5-pin reverse key connector: Use for Stop & Pre-Stop inputs. Also for PosiFlow or FCM input (Sold separately)
E90497 4-pin square connector: Use for relay outputs (Sold separately)

CONTROLLER SPECIFICATIONS

MODEL			EWN-Y	
Operational Mode	Auto Control		Feedback control	0.1 to 999.9mL/min 0.001 to 59.994 L/H 0.001 to 15.829 GPH
	EXT Control		Analog rigid	4 to 20, 20 to 4, 0 to 20, 20 to 0mA proportional control to stroke rate
			Analog variable	2 - point setting (Analog variable) (Proportional control to flow/stroke rate in the range of 0-20mA)
			BATCH	0.1 to 99999.9 mL 0.001 to 99.999 L 0.001 to 26.385 G
Display	LCD		14seg-5digits backlit LCD Operating conditions and Flow rate etc	
	LED	ON	A 2-color LED lights in orange when turning on power and in green during operation.	
		STOP	A 2-color LED lights in red when receiving the STOP signal and in orange when receiving the PreSTOP signal.	
		OUT	A LED lights in red when the pump is transmitting a signal to external devices.	
Keypad	5 keys		START/STOP, EXT, ▲(UP), ▼(DOWN), Disp	
Control Function	STOP/ Pre-STOP		Pump keeps running when Pre-STOP is activated.Pump stops when STOP is activated.*1	
	Prime		Pump runs at max. stroke rate while up and down keys are pressed.	
	Key Lock		Keypad can be locked and unlocked.	
	Inter Lock		Operation stop at contact input*1	
	Reading Calibration		Reading adjustment of flow volume per shot	
	Buffer		ON/OFF of the batch control buffer memory	
Input	Pulse Signal Input for Batch Control		No voltage contact or open collector*2	
	Analog		0 to 20mADC (Input resistance is 220Ω.)	
	STOP/Pre-STOP (Level Sensor)		No voltage contact or open collector*2	
	AUX		No voltage contact or open collector*2	
	Interlock		No voltage contact or open collector*2	
	Batch		No voltage contact or open collector*2	
Output	OUT1		No voltage contact (Mechanical relay), 250VAC 3A (Resistive load) Either the Signal recognition output*3, Control error, or Poor flow detection is selectable (default: STOP).	
	OUT2		No voltage contact (PhotoMOS relay), AC/DC24V 0.1A Either the Sensor signal output, Synchronous output, Signal recognition output*3, Control error or Poor flow detection is selectable.	
	Analog		4 to 20mA DC (Allowable load resistance : 500Ω)	
Data Logging			Total flow volume Total number of strokes (1=1000 shots) Total number of signal outputs (OUT1) Total number of signal outputs (OUT2) Total power connection time Total operating time	
Buffer Memory			Nonvolatile memory	
Power Voltage*4			100 to 240VAC 50/60Hz	

Note 1: The setting can be changed to "operation starts with contact closure".
Note 2: The maximum applied voltage from the pump to an external contact is 12V at 2.3mA. When using a mechanical relay, its minimum application load should be 1mA or below.
Note 3: STOP/ Pre-STOP/ Interlock/ Batch completion outputs are independently enabled.
Note 4: Observe the specified power voltage range. Otherwise failure may result. The allowable power voltage range is 90 to 264VAC

WALCHEM
IWAKI America Inc.

ISO 9001 registered company
180501.O May 2023

Walchem, Iwaki America Inc.
Five Boynton Road Hopping Brook Park | Holliston, MA 01746 USA | Phone 508-429-1110 | walchem.com